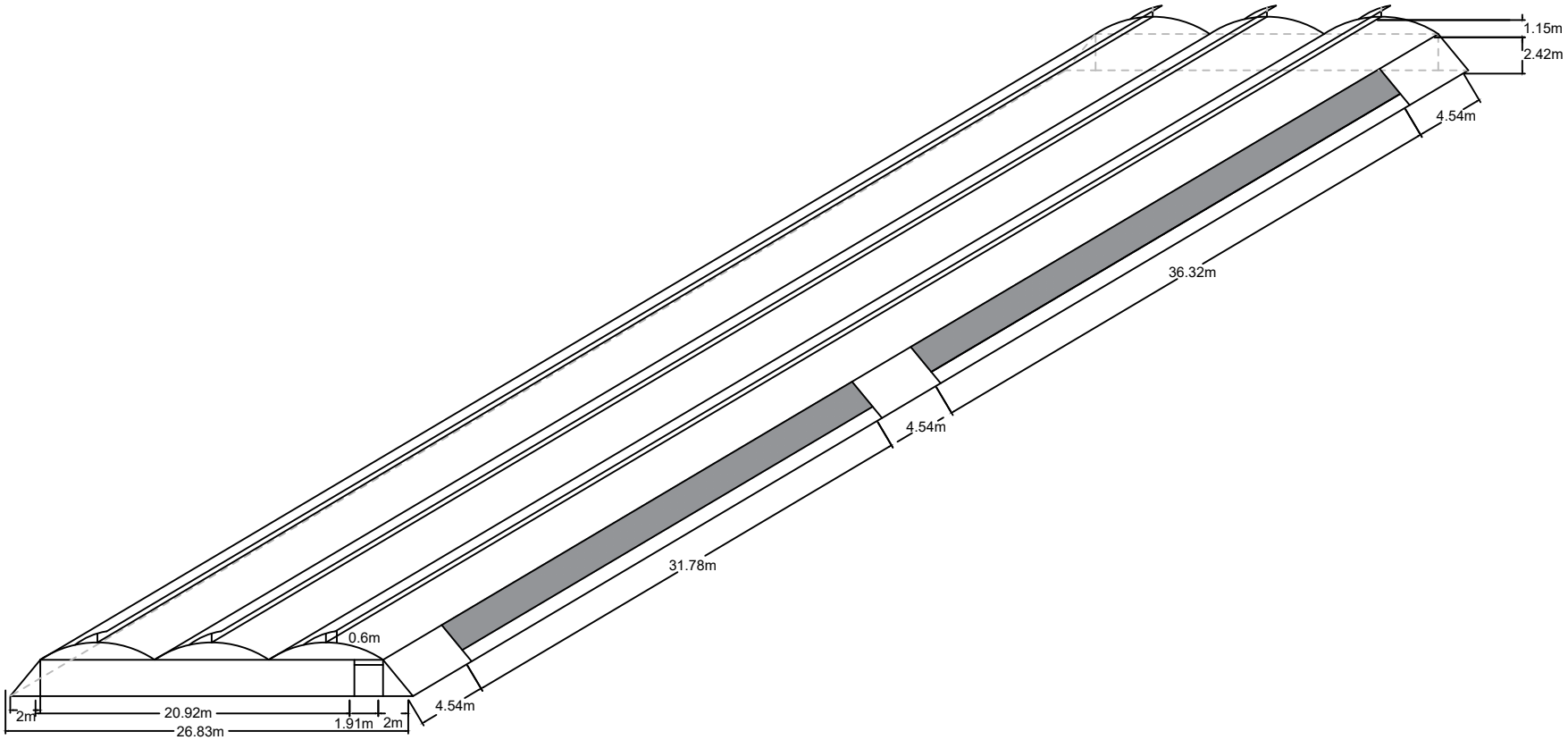
1.15m
2.42m
4.54m
36.32m
4.54m
31.78m
0.6m
4.54m
2m
20.92m
1.91m
2m
26.83m